stanton

743

think LOCAL
www.stantonsofas.com



Please see Style 143 (Comfort Plush) or Style 643 (Classic Foam) for Fabric Options

SOFAS

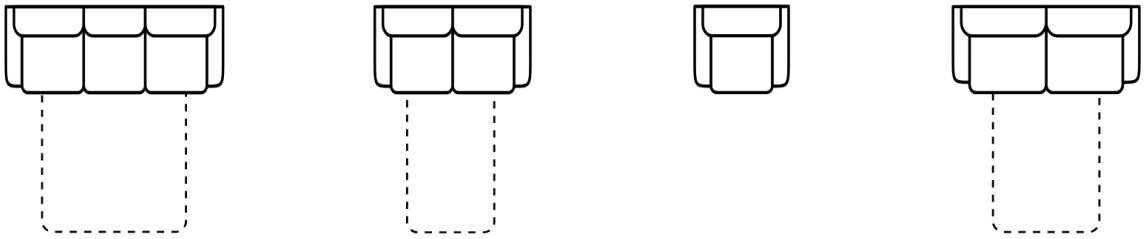

OTTOS

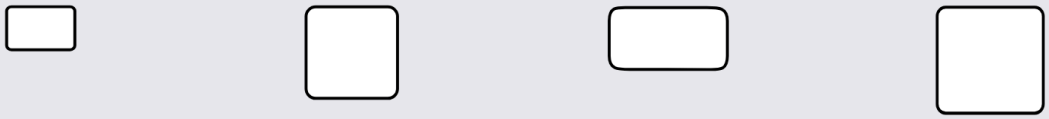

SECTIONALS

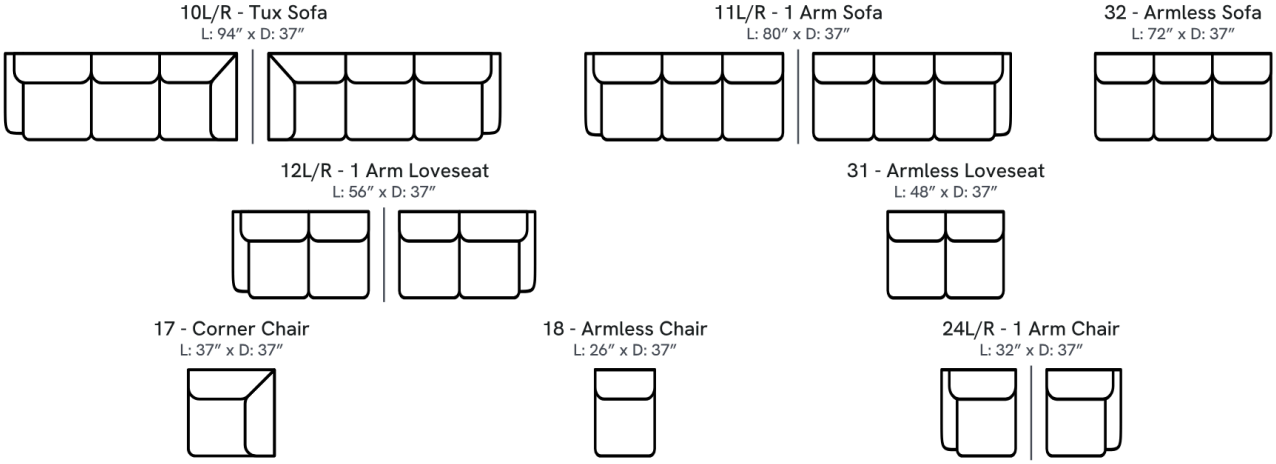

643 Sectional Dimensions May Vary				
PLUSH Comfort Plush	Sofa Height-38″	Seat Height-21″	Seat Depth-21″	Arm Height-27″

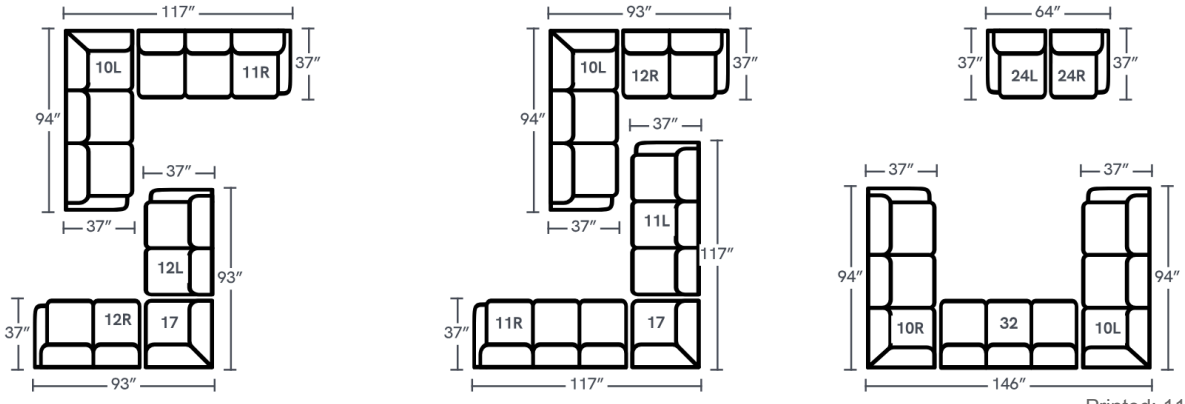

Dimensions are approximate and subject to change.