stanton

467

think LOCAL
www.stantonsofas.com



Body 1: All Body Fabric -- Contrast 1 : Both Sides of Pillows Including Welt -- Contrast 2 : Both Sides of Pillows Including Welt

PIECES

Sofa Height: 37" Seat Height: 21" Seat Depth: 23" Arm Height: 26"

SOFAS

01 - Sofa
L: 96" x D: 40"

02 - Loveseat
L: 70" x D: 40"

03 - Chair
L: 44" x D: 40"

33 - Sofa Chaise
97 - Sofa Chaise w/ Stor.
L: 96" x D: 68"
Storage Available On - 97
Storage
Sofa Chaise cushions are reversible and can be moved w/ the ottoman to the opposite side

SECTIONALS

10L - Tux Sofa *
L: 101" x D: 40"

11L - 1 Arm Sofa *
L: 87" x D: 40"

45R - 1 Arm Sofa Chaise *
50R - 1 Arm Sofa Chaise w/ Storage*
L: 87" x D: 68"
Storage Available On - 50
Storage
Sectional Chaise cushions are reversible and can be moved w/ the ottoman to other sectional pieces with arms

95L - Tux Loveseat *
L: 75" x D: 40"

12L - 1 Arm Loveseat *
L: 61" x D: 40"

23 - Armless Loveseat
L: 53" x D: 40"

17 - Corner Chair
L: 40" x D: 40"

24L - 1 Arm Chair *
L: 35" x D: 40"

18 - Armless Chair
L: 27" x D: 40"

41 - Corner Wedge
L: 52" x D: 52"

21R - 1 Arm Chaise *
L: 37" x D: 68"

75R - 1 Arm Angled Cuddler *
L: 65" x D: 68"

OTTOS

46 - LG Otto.
L: 45" x D: 45"

29 - Cocktail Otto.
L: 39" x D: 39"

35 - Storage Otto.
L: 37" x D: 37"

13 - Sm. Sq. Otto.
36 - Sm. Sq. Storage Otto.
L: 31" x D: 31"

43 - Rect. Otto.
47 - Rect. Storage Otto.
L: 49" x D: 27"

04 - Ottoman
L: 31" x D: 21"

Feather Pillows

* Available in both Left and Right configurations

CONFIGURATIONS

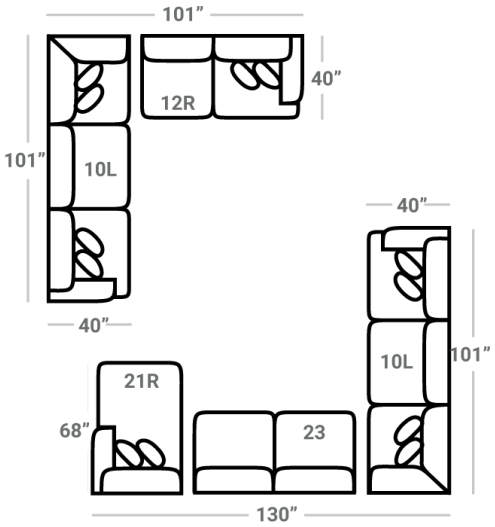

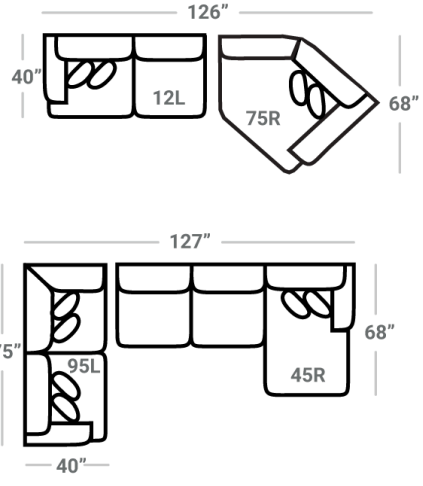

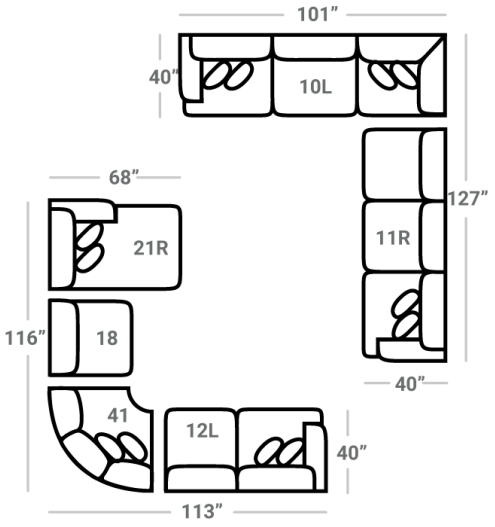

Dimensions are approximate and subject to change.

Printed: 11/23/2026